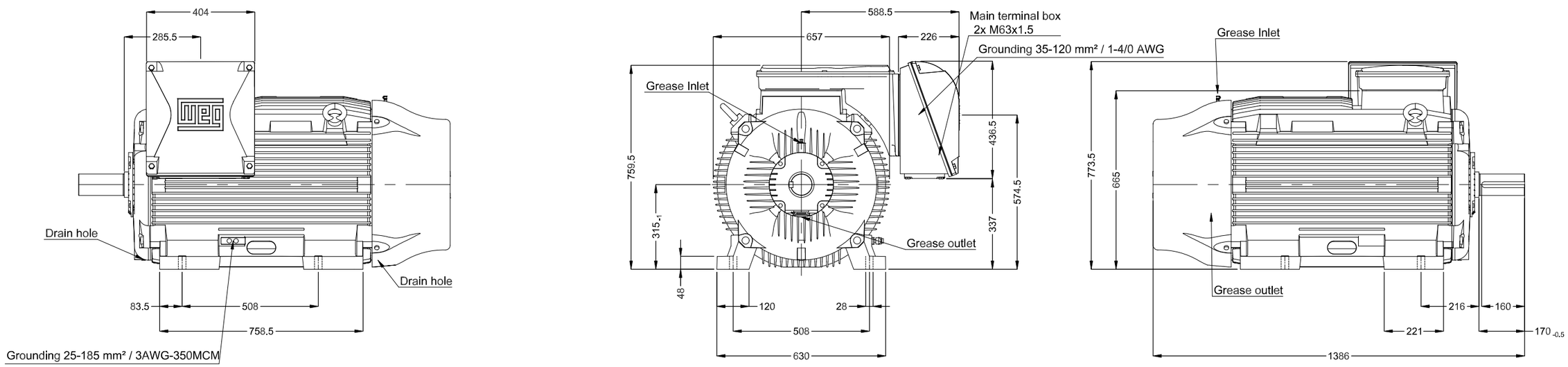

- Continuous resin flow impregnation
- Without alarm thermal protection
- Without overload protector at bearing
- Without switch off thermal protection
- Class F insulation - 80K temperature rise
- Rotation CW and CCW
- NDE endshield with electrically insulated bearing hub
- Color RAL 5009
- Painting plan 203A
- Mounting B3L(E)

DE Shaft End

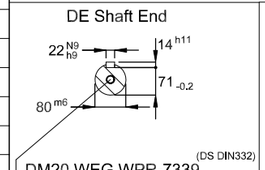

250 HP 04 Poles 60 Hz | A

ECM	LOC	SUMMARY OF MODIFICATIONS	EXECUTED	CHECKED	RELEASED	DATE	VER
			HYBRISUSER				00

EXECUTED	HYBRISUSER
CHECKED	
RELEASED	
REL. DATE	

THREE PH. MOTOR W22 IE4
FRAME 315L IP55 TEFC

PREVIEW
WDD 00
SHEET /

Dimensions in mm

A3

WEG's property. Forbidden reproduction without previous authorization.