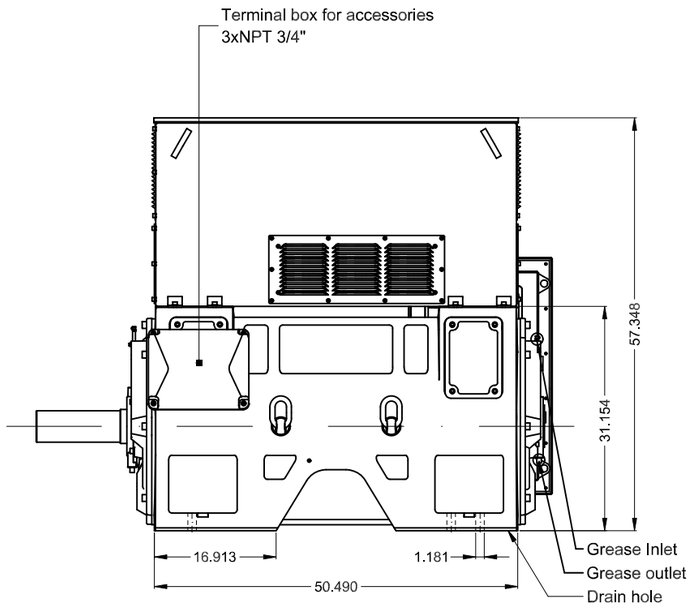

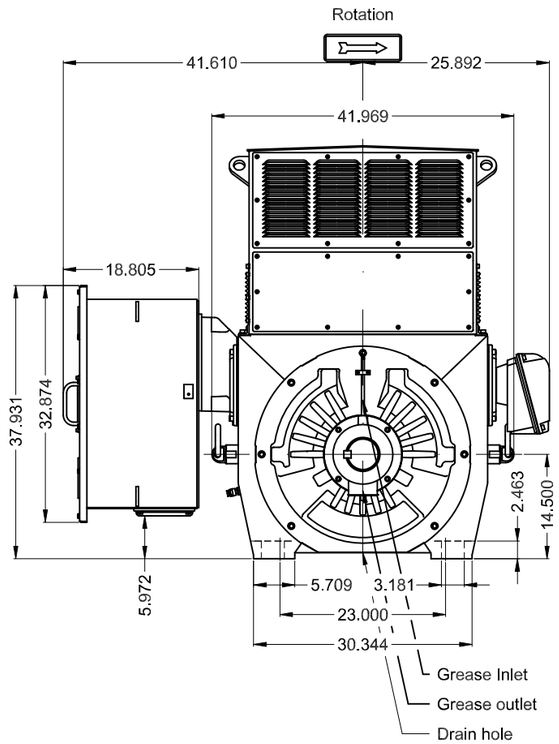

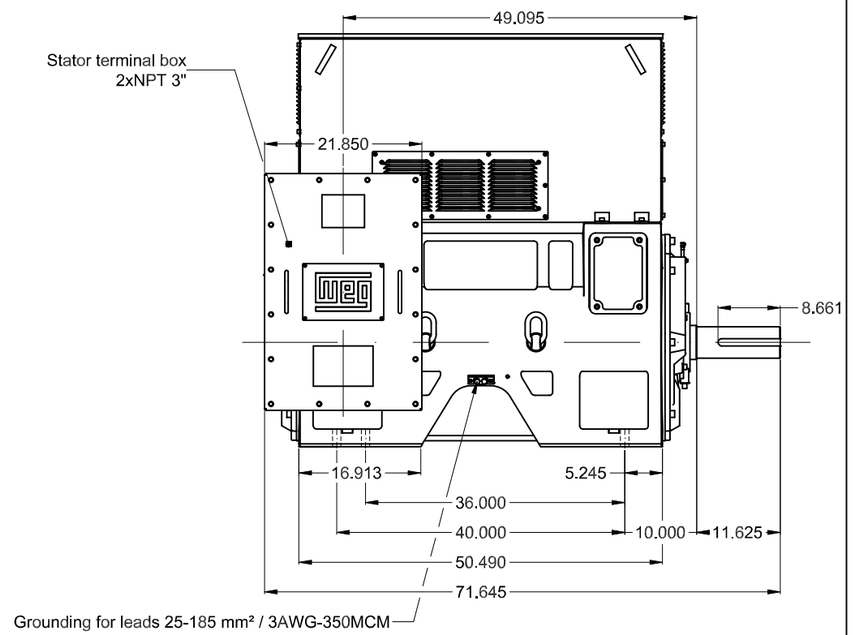

Finish color Munsell 2.5 YR 6/14 inside of terminal box
NDE endshield with electrically insulated bearing hub (HGF)
Color RAL 5009
Painting plan 214P
Mounting B3R(D)

DE Shaft End

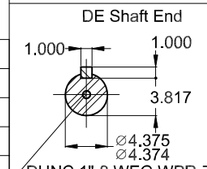

DUNC 1"-8 WEG WPR-7339

1000 HP 04 Poles 60 Hz 4160 V | A

1:21

ECM	LOC	SUMMARY OF MODIFICATIONS	EXECUTED	CHECKED	RELEASED	DATE	VER
			HYBRISUSER				00

EXECUTED	HYBRISUSER	THREE PH. MOTOR W60	PREVIEW
CHECKED		FRAME 5810/11 IP24 ODP WPII	WDD 00
RELEASED			
REL. DATE		WMO Jaragua do Sul Product Engineering	SHEET 1 / 1

Dimensions in inches

XME A3

WEG's property. Forbidden reproduction without previous authorization.